# DOOR SCHEDULE

| DOOR NO. | LOCATION | SIZE (w. x h. x t.) | DOOR TYPE | DOOR MATERIAL | DOOR FINISH | FRAME TYPE | FRAME MATERIAL | FRAME FINISH | HINGES | CLOSER | LOCK | PRIVACY SET | PUSH / PULL | FLOOR STOP | SIGNAGE | FIRE RATING | REMARKS |
|---|---|---|---|---|---|---|---|---|---|---|---|---|---|---|---|---|---|
| D209 | BEDROOM | 0.96X2.13X0.04<br>3'-2"X7'-0"X1¾" | 3 | S.C.W | PAINT | A | H.M. | PAINT | 1½ PAIR | YES | YES | YES | – | YES | – | – | |
| | | | | | | A | | | | | | | | | | | |
| D211 | STAIR-2 | 0.96X2.13X0.04<br>3'-2"X7'-0"X1¾" | 3 | H.M. | PAINT | A | H.M. | PAINT | 1½ PAIR | YES | YES | – | YES | YES | YES | YES | 45 MIN FIRE RATING; |

| LEGEND | |
|---|---|
| | HOLLOW METAL |
| S.C.W. | SOLID CORE WOOD |
| H.C.W. | HOLLOW METAL CORE |
| A. C. TILE | ACOUSTIC CEILING TILE |
| | MOISTURE RESISTANT |
| ANOD | ANODIZED |
| PORCELAIN | PORCELAIN TILES |

NOTES: (FOR NEW & IF REQUIRED)

– REQUIRED ADDITIONAL HARDWARE TO BE FINALIZED & SELECTED BY THE OWNER AS REQUIRED;
1. ALL HARDWARE SHALL BE COMMERCIAL TYPE, GRADE 1 OR TO MATCH;
2. LOCKSETS, PRIVACY SETS, PUSH / PULL SHALL BE LEVER TYPE.
3. PUSH / PULL SHALL HAVE LATCH.

NOTES:

UNLESS NOTED OTHERWISE, ALL EXISTING DOOR TO REMAIN.
EXISTING HARDWARE TO BE RETAINED AND REUSED. USE NEW WHERE REQUIRED TO MATCH.
FIELD VERIFY ALL DOOR, FRAME, HARDWARE ETC. ALL ASSEMBLY FOR ANY DAMAGE, REPAIR OR REPLACE AS REQUIRED TO MATCH.

PROVIDE ALTERNATE PRICE FOR SOLID CORE WOOD DOOR

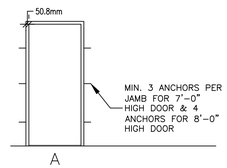


FRAME TYPES
SCALE: 1:50

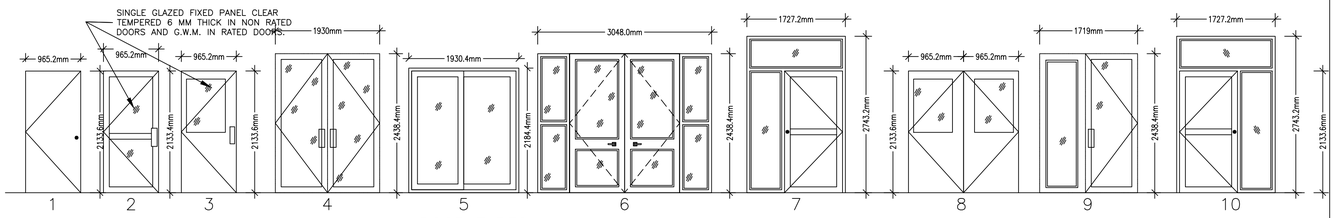


DOOR TYPES
SCALE: 1:50

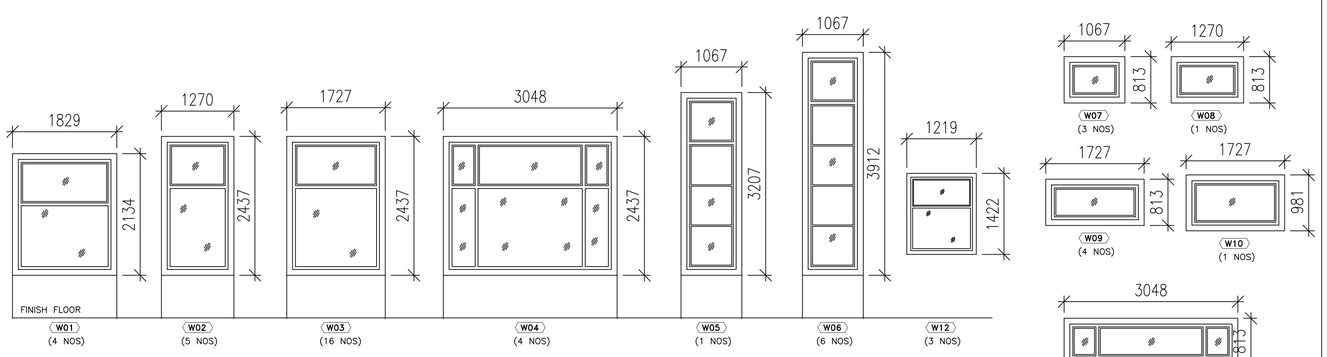


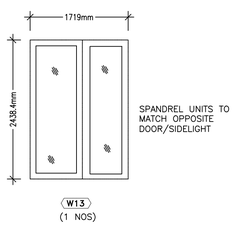


WINDOW TYPES
SCALE: 1:50


CHINTAN VIRANI ARCHITECT INC.
CHINTAN J. VIRANI
B. ARCH. | OAA, MRAIC, | AIA | COAI

ONTARIO ASSOCIATION OF ARCHITECTS
CHINTAN JAYSHRIKANT VIRANI
LICENCE
5362

9898 HOLLY CRESCENT,
WINDSOR, ONTARIO.
CANADA N8R 1Z3
PHONE: (519)979-9017
CELL: (519) 567-1800
FAX: (519) 979-4909
EMAIL:chintan@chintan.ca
WWW.CHINTAN.CA


| NO. | ISSUED FOR | DATE |
|---|---|---|
| 13. | | |
| 12. | | |
| 11. | IFC REVISION 1 | MAR. 14/2024 |
| 10. | REVISED AS RSM COMMENTS | JULY 11/2022 |
| 09. | PERMIT | APR. 09/2022 |
| 08. | REVISED AS CITY'S COMMENT – SP APPLICATION | JULY 20/2021 |
| 07. | REVISED AS CITY'S COMMENT – SP APPLICATION | APR. 12/2021 |
| 06. | SITE PLAN APPLICATION | NOV. 30/2020 |
| 05. | PROGRESS DRAWINGS–REVISED AS TEMPLE DIRECTOR COMMENT | NOV. 11/2020 |
| 04. | REVISED AS TEMPLE DIRECTOR COMMENT – WEST ENTRY | OCT. 22/2020 |
| 03. | PROGRESS DRAWINGS – REVISED REVIEW | OCT. 20/2020 |
| 02. | OWNER'S REVISED REVIEW | OCT. 19/2020 |
| 01. | RAM'S REVIEW | OCT. 17/2020 |

**PROJECT NAME AND LOCATION**

PROPOSED RADHA KRISHNA MANDIR AND CULTURAL CENTRE INC.

85 BOXWOOD DRIVE
CAMBRIDGE, ONTARIO – N3E 0E5

**DRAWING TITLE**

SCHEDULE–2

– DOOR SCHEDULE
– WINDOW TYPES
– WALL TYPES
– JAMB DETAIL

**NOTE:**
– DO NOT SCALE DRAWINGS.
– ALL DIMENSIONS TO BE CHECKED AND VERIFIED ON THE JOB SITE.
– ANY AND ALL DISCREPANCIES TO BE REPORTED TO THE ARCHITECT.
– ALL DRAWINGS REMAIN THE PROPERTY OF THE ARCHITECT.

| | |
|---|---|
| PROJECT NO. | 2055 |
| DATE | OCT. 2020 |
| DRAWN BY | V.P./K.V. |
| CHECKED BY | CJV |
| DRAWING NO. | |

A / B C
**A.** DETAIL NO.
**B.** LOCATION
**C.** DETAILED
SHEET ON

A-7.2